ENGRAVED INDEX

MATERIAL
PLEXIGLASS

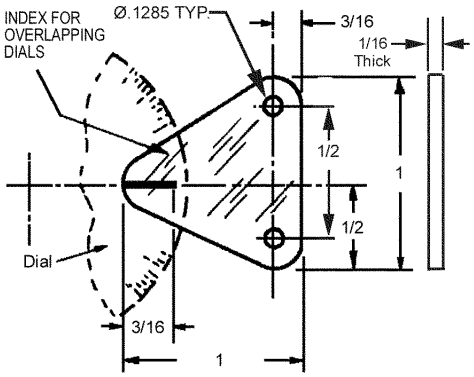

STOCK NO.	MATERIAL & FINISH
A12-1	PLEXIGLASS (CLEAR) MIL-P-5425

MATERIAL
ALUMINUM BLACK ANODIZED

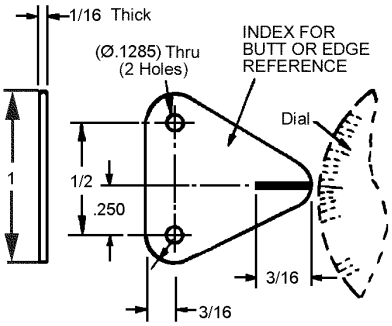

STOCK NO.	MATERIAL & FINISH
A12-2	24 ST. ALUMINUM, BLACK ANODIZED